Design and Development of a Multipurpose and Flexible Agricultural Robot for Precision Agriculture

Muzamil Islam[1], Fatima Mukarrama[1], Abdul Moaiz Haider[1], Danish Hussain[2*], Anas Bin Aqeel[1], Raja Asim Mustafa[3]
[1]Department of Mechatronics Engineering, College of Electrical and Mechanical Engineering, National University of Sciences and Technology, Islamabad, 44000, Pakistan
[2]Department of Robotics and Artificial Intelligence, School of Mechanical and Manufacturing Engineering, National University of Sciences and Technology, Islamabad, 44000, Pakistan
[3]Department of Electronics Engineering, University of Engineering and Technology, Taxila, 47050, Pakistan
*Corresponding author: danish.hussain@smme.nust.edu.pk
Received:26-01-2025, Received in Revised form: 23-04-2026, Accepted: 27-05-2026, Published: 30-06-2026

Abstract

Precision agriculture uses modern technologies such as the Global Positioning System (GPS), Geographic Information System (GIS), remote sensing, drones, satellites, sensors, and field robots to enhance agricultural productivity. Field robots are an emerging technology in precision agriculture with a wide range of applications. However, commercially available robots are usually single-purpose and expensive. In this study, we propose a flexible agricultural field robot. The design incorporates four independent wheel steering mechanisms. The steering mechanism is based on a wheel assembly that rotates with a linear actuator, providing excellent maneuverability and flexibility. Each four-wheel assembly includes all required electronics for a two-wheel robot. Similarly, the extension rods between the two wheels can vary in shape and length to accommodate different agricultural requirements. The manufactured robot was operated using a Raspberry Pi 4 module via a mobile application. Its adaptable design enables integration with required platforms to execute a wide range of agricultural operations, such as seeding, drilling and autonomous driving using path-planning algorithms. The developed robot provides a cost-effective solution for precision agricultural technology.

Keywords: Precision Agriculture, Design and Development, Agricultural robot, Manufacturing, Steering system

Introduction

Precision agriculture uses modern agricultural technologies, including Global Positioning System (GPS), Geographic Information System (GIS), Remote sensing, drones, satellites, sensors, and robots [1]. Agricultural robots are widely employed in precision agriculture to execute a variety of tasks, including seeding, drilling, harvesting, weed removal, and pesticide spraying [2], [3], [4], [5]. Various types of specific-purpose autonomous and semi-autonomous robots are employed in agriculture. For instance, autonomous robots equipped with GPS and an array of sensors perform plowing, seeding, and other field tasks with minimal human intervention and precise navigation. Drones are utilized for aerial surveillance, pesticide application, and crop health monitoring [6]. Harvesting robots pick fruits and vegetables with precision, reducing damage and increasing efficiency [7]. Weeding robots involve computer vision and artificial intelligence to identify and eliminate weeds without harming crops, while seeding robots ensure precise seeding at optimal depths and spacing [8]. Precision agriculture is also used to assess, manage, and evaluate crop production [9]. This is facilitated by deploying data and technology for informed decisions and optimizing crop production through controlled application of seeds, fertilizers, and agrochemicals, as well as efficient harvesting processes [10], [11], [12], [13]. Harvesting and picking robots use cameras and sensors to collect and analyze data, enabling informed decisions about applying herbicides, fertilizers, and water [14], [15].

Agricultural platforms can be categorized as task-specific robots designed for specific tasks within predetermined domains and generic platforms capable of executing multiple tasks across different fields [16]. Historical research on agricultural robots includes mobile robotic applications reported by the American Society of Agricultural Engineering in 1989, and robots developed for harvesting [17]. The rocker-bogie mechanism, invented by Donald Bickler, excels at climbing, making it ideal for traversing large bumps and uneven terrain.

The proposed design was intended to develop a flexible and multipurpose robot. Although the 2-wheeler design balances stability and maneuverability, it is effective on moderately uneven terrain [18]. However, the most effective and most balanced structure is a 4-wheel mechanism. Independent wheel control improves maneuverability around obstacles and adaptability to varied field conditions [19], [20].

This study introduces a flexible field robot design with four independent wheel-steering mechanisms, enabling excellent maneuverability. The robot features 4-wheel assemblies with necessary electronics and variable extension rods for different agricultural needs. Controlled by a Raspberry Pi 4 via a mobile app, the robot integrates sensors and actuators for efficient operation. This adaptable, cost-effective platform can support tasks such as seeding and drilling.

Design and Manufacturing

The design and development of the flexible agricultural robot focus on its ability to perform agricultural tasks and move across an agricultural field. For this purpose, four independent four-wheeled steering mechanisms were designed. The team manufactured and tested the designed robot. This section focuses on the mechanical design and analysis of the robot's individual components. It provides a comprehensive discussion of the materials, techniques, and software employed to achieve the desired results throughout the process.

Design of the Robot

The agricultural robot's design incorporates a four-wheel steering mechanism, which significantly enhances its maneuverability in agricultural fields. The robot provides flexibility in task performance by integrating plug-and-play modules to support tasks like fruit plucking and seeding, but this design focuses primarily on drilling. The robot shown in Figure 1 has overall dimensions of 1600×900×500 mm. The robot's main body provides flexibility, featuring symmetrical wheel assemblies that include a main frame, steering shaft, motor, tires, rims, axle, chains, sprockets, and bearings, as illustrated in Figure 1(b). Each wheel assembly is connected via beams mounted on the shafts. The two sets of wheel assemblies are connected with adjustable beams that can be

http://dx.doi.org/10.24949/njes.v19i1.862

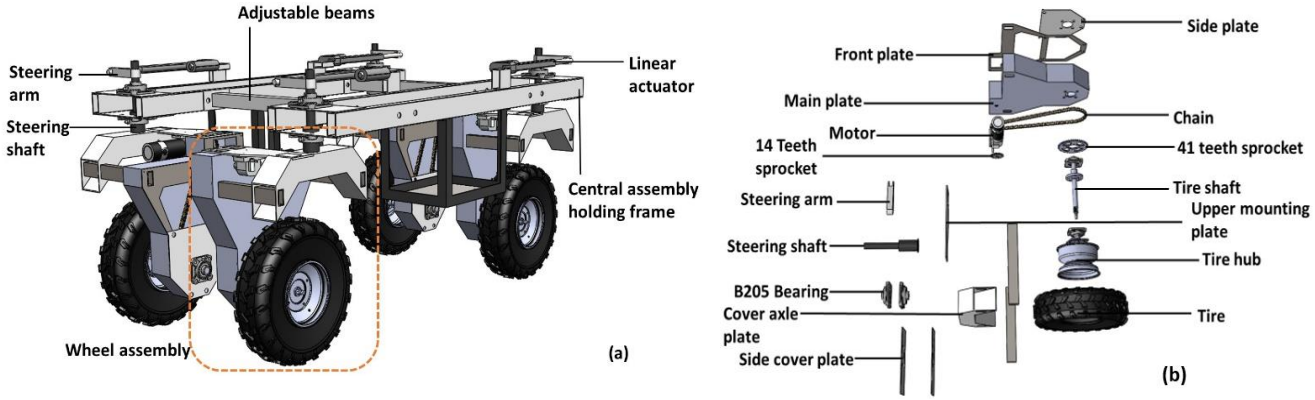

Figure 1: (a) Structural design of agricultural robots. (b) Wheel assembly of agriculture robot

changed in length and shape, such as U-shaped, to accommodate the requirements of different crops. Such a multipurpose capability aims to provide a cost-effective solution for farmers. These beams are secured with nuts and bolts, allowing easy adjustment to increase the robot's width and providing versatility for various agricultural applications. This design approach keeps the robot adaptable to different tasks, offering a low-cost, multifunctional solution for diverse requirements. The axle cover plate protects the wheels, the F205 FKD bearing ensures smooth operation, and the 14T and 41T sprockets connect the motor and wheel through a chain assembly. Four linear actuators (FY022) steer the robot. Each actuator's rod extends and retracts to move the wheel assembly's arms to turn the robot left or right, while the actuator holder secures the actuator in place. For easy steering, each wheel uses a linear actuator to rotate, and each wheel is driven by an individual motor and gear system coupled to the wheel via a chain to achieve the required torque and RPM.

Steering mechanism

The agricultural robot's design integrates a mobility system based on a steering and motion mechanism. The steering mechanism ensures mobility and maneuverability. Robots typically use steering systems such as differential steering, skid steering, Ackermann steering, crab steering, articulated steering, and four-wheel steering (4WS) [21], [22].

We used a 4WS steering mechanism to provide flexibility in the robot's operation. The robot uses a 4WS steering system with four linear actuators connected to the steering arm, driving a linkage (the steering shaft) that connects to the wheel assembly. The actuator's motion induces torque to rotate the steering shaft, moving the wheel assembly and turning the robot left or right. Four linear actuators, each dedicated to a wheel assembly, allow for independent wheel control, thereby enhancing maneuverability and flexibility. Each linear actuator can be extended to 260 mm. The wheels are rectilinear with the robot when each linear actuator is extended halfway. A 130 mm forward stroke turns the wheels right almost 45°, while a 130 mm retraction turns the wheels left almost 45°.

Figure 2 shows the kinematic model of the four-wheel independent steering mechanism.

Let longitudinal velocity (v) be constant (assuming constant speed), then

$$\theta_{f1} = tan^{-1}(\frac{X_{f1g}}{L})$$

$$\theta_{f2} = tan^{-1}(\frac{X_{f2g}}{L})$$

$$\theta_{r1} = tan^{-1}(\frac{v_3}{L})$$

$$\theta_{r2} = tan^{-1}(\frac{v_4}{L})$$

Yaw rate (ψ):

$$\psi = \frac{v_1}{l} \times tan\,\theta_{f1} - \frac{v_2}{l} \times tan\,\theta_{f2} - \frac{v_3}{L} \times tan\,\theta_{r1} - \frac{v_4}{L} \times tan\,\theta_{r2}$$

Lateral velocity (V_y): $V_y = \sum_{i=1}^{4} v_i \times sin\,\psi$

Lateral displacement (Δ y): $\Delta y = \int V_y\, dt$

Overall angular velocity: $\boldsymbol{\omega} = (\boldsymbol{v_1} \times \mathbf{AF}) + (\boldsymbol{v_2} \times \mathbf{BF}) + (\boldsymbol{v_3} \times \mathbf{CF}) + (\boldsymbol{v_4} \times \mathbf{DF})$ ∵ Individual distances from instantaneous center of velocity.

The kinematic model of a four-wheeled vehicle in planar motion shown in Figure 2 rotates about the vehicle's instantaneous center of velocity (I.C.V.). The length between the front and rear axles is L, where the distance between the front and rear wheels' steering arms is l. Xf1g and Xf2g are the displacements between the center of gravity and the front-wheel axles. The vehicle's wheels are labeled A, B, C, and D in the diagram, and their corresponding velocity vectors are v1, v2, v3, and v4. The velocity of each wheel is broken down into its x- and y-components, as follows: v1x, v1y, v2x, v2y, v3x, v3y, v4x, v4y. The angles θf1, θf2, θr1, and θr2 represent the wheels' steering angles relative to the vehicle's forward motion. The vehicle's effective center of gravity, point G, is the focal point of the kinematic analysis. This point is shifted from the axis on the nature of the ground on which the agricultural robot is moving due to dynamic movements, weight shifting, and suspension changes. EF is the length from the effective center of gravity (G) to the I.C.V., while AF, BF, CF, and DF are the lengths from the I.C.V. to v1, v2, v3, and v4, respectively, and they describe the vehicle's turning motion. In this case, the relationship between the wheel's velocity components and their individual distances from the I.C.V. yields the vehicle's angular velocity, or ω. To analyze the vehicle's route during a turn and calculate the wheel velocities, slip angles, and steering angles required to maintain the intended trajectory, it is essential to understand the kinematic relationships shown in Figure 2.

NUST Journal of Engineering Sciences (NJES) is licensed under a Creative Commons Attribution 4.0 International License.

Development of robot platforms

The developed agricultural robot is shown in Figure 3. Its development involved several manufacturing processes, including drilling, threading, laser cutting, CNC metal cutting, and lathe work. These processes are essential for manufacturing robot parts. Manufactured parts were welded and/or assembled to fabricate the robot. The robot body is made of mild steel. The electrical system of agricultural robots is carefully designed and implemented to ensure reliable operation.

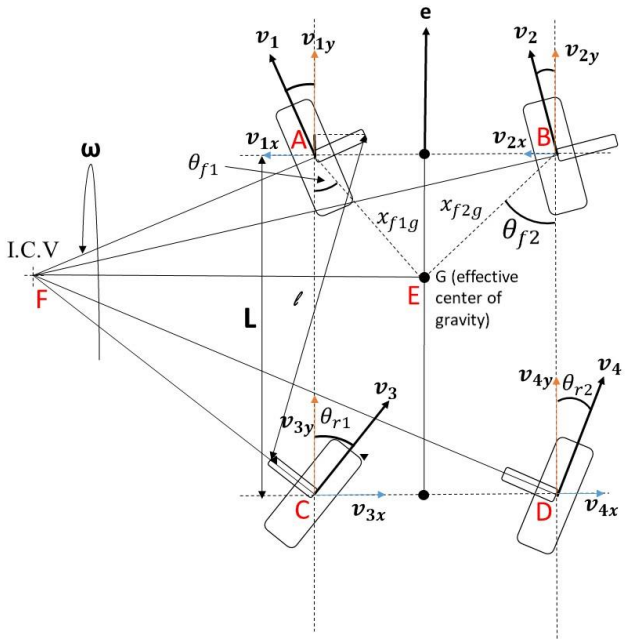

Figure 2: Kinematic diagram of the steering mechanism illustrating all axle rotation angles used in the mathematical model.

The overall block diagram of the electrical system is shown in Figure 4. The Raspberry Pi 4 serves as the central processing unit; two Arduino Megas have been used for powering the motors of the wheel assembly and linear actuators for the steering mechanisms. For simplicity, Figure 4 shows only one Arduino Mega. The robot's four motors are powered through Cytron SmartDrive 60 motor drivers, which are energized by two series-connected AG12V100F NARADA 12 V batteries. A main breaker is used to prevent the robot's circuitry from being damaged due to overloading. A separate 12 V battery powers a BTS 7960 motor driver for each wheel to drive linear actuators for steering. The Arduino Mega 2560 transmits command signals to the drivers to operate the steering system as needed.

A power bank connected to the Raspberry Pi serves as the primary power source for uninterrupted operation. The AG12V100F NARADA batteries power the wheel motors and linear actuators, while the Cytron SmartDrive 60 and BTS 7960 motor drivers provide precise control over wheel movement and smooth steering. For simplicity, Figure 4 shows only one BTS 7960 motor driver.

Operator interaction is managed through a smartphone application developed using Android Studio. This app provides a user-friendly interface that lets operators input commands based on the selected operating mode. The application supports Bluetooth connectivity and enables real-time remote monitoring and control of the agricultural robot.

Testing and Operation

The custom smartphone application, developed using Android Studio, enables teleoperation of the agricultural robot, allowing users to remotely control and monitor the robot's operations. The app interface includes several key features: motor control, where users can adjust the robot's speed and direction from 0 km/h to 6 km/h, ensuring smooth acceleration and deceleration. This control lets the robot start gradually, reach the desired speed, perform tasks and then decelerate smoothly to a stop at 0 km/h, while preventing sudden movements that could affect accurate motion. The app also lets users switch between operational modes via teleoperation. Real-time monitoring provides feedback on motor speeds, battery levels, and connection status, while timed task management offers flexibility in managing agricultural operations. The electrical system and coding infrastructure were integrated.

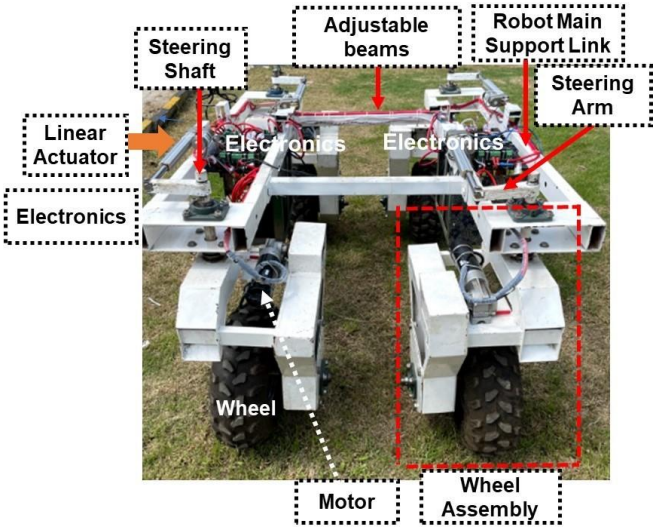

Figure 3: Image of the manufactured agriculture robot with all electrical and mechanical parts.

The screw-drilling mechanism is used in the agribot. This mechanism contains an auger drill bit used to dig holes in soil, and the drill motor uses gears to extend and retract the auger bit for drilling. A lead screw connects the auger drill bit to the assembly and mounting base (with all parts of the assembly) connected as a support frame. The drilling assembly is shown in Figure 5 (a). This mechanism is designed to operate through a 15 cm diameter aperture, moving vertically to drill holes up to 15 cm deep. The mechanism rotates clockwise to drill and counterclockwise to retract, ensuring precise operation. Driven by a high-torque motor at 200 RPM, the mechanism extends to 62 cm during operation and retracts to 47 cm when not in use.

NUST Journal of Engineering Sciences (NJES) is licensed under a Creative Commons Attribution 4.0 International License.

This design integrates traditional farming functions into a single automated sequence to optimize efficiency and productivity. Testing focused on the robot's overall functionality, evaluating its ability to execute various agricultural tasks with precision and reliability. One key feature tested was the 15 cm diameter drilling mechanism. The drill bit's compatibility with different seed sizes adds flexibility. It is powered by a high-torque motor running at 200 RPM and can drill holes up to 15 cm deep. The experiment showed that the drill bit reaches a depth of 6.5 cm (due to the maximum available drill size beyond the clearance height) during testing, indicating efficient operation of the robot's drilling mechanism.

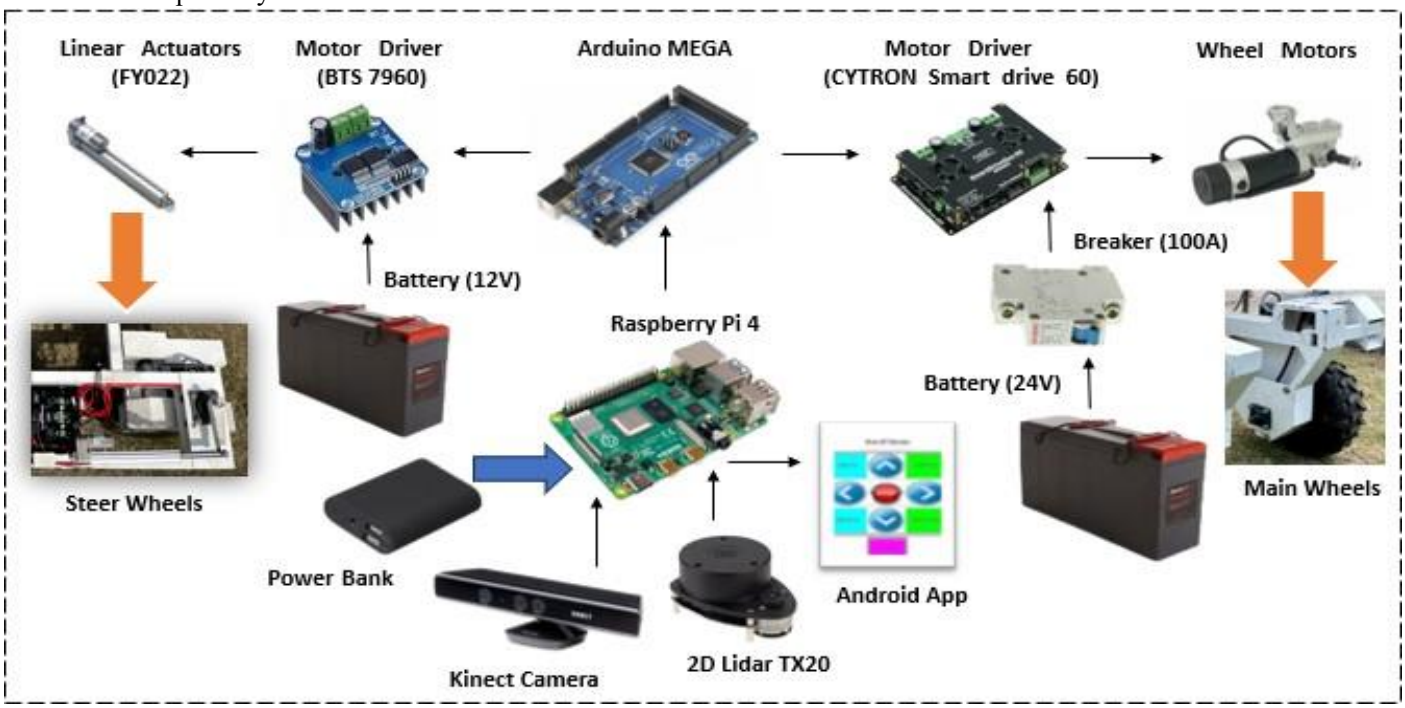

Figure 4: Block diagram of the developed agriculture robot.

We have integrated 2D LiDAR and a Kinect Camera in our operational circuitry to provide accurate real-time distance measurements for efficient navigation and obstacle avoidance for Simultaneous Localization and Mapping (SLAM) [23, 24]; however, implementation of SLAM is not in the scope of the current work, which is focused on the design and development of the robot, primarily.

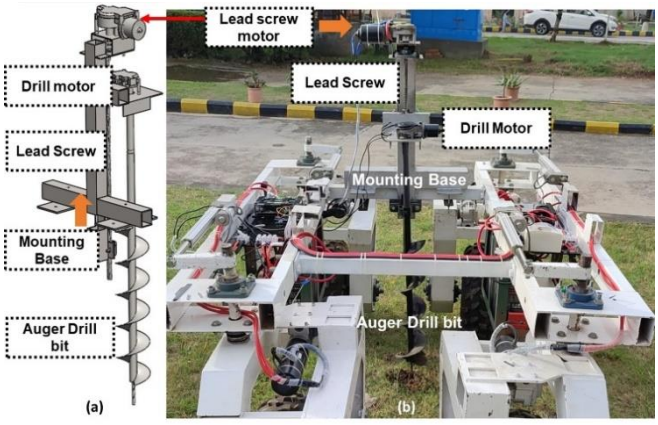

Figure 5: (a) Drilling assembly design. (b) Mounting of the drilling mechanism on the agricultural robot.

Conclusion

We report on the design and development of a four-wheel steering mechanism-based robot for precision agriculture. The steering system is based on a wheel assembly that can be rotated using a linear actuator for enhanced maneuverability and flexibility. The extension rods between the wheels can be adjusted in shape and length to meet different agricultural needs. The robot operates via a custom mobile application and is controlled by a Raspberry Pi 4 and two Arduino boards as slave controllers. The robot's adaptable design supports integrating various platforms to perform a wide range of agricultural tasks, such as drilling. This robot offers a cost-effective solution for precision agriculture. Future advancements may include integrating sophisticated sensors, machine learning models for real-time decision-making, and higher-level operation and automation for precision agriculture.

Acknowledgements

We thank the Pakistan Science Foundation (PSF) for supporting this research through funding under grant PSF/NSLP/C-NUST (746) and support from the Robot Maker Lab, National Centre of Robotics and Automation, National University of Sciences and Technology.

NUST Journal of Engineering Sciences (NJES) is licensed under a Creative Commons Attribution 4.0 International License.

References

1. U. Shafi, R. Mumtaz, J. García-Nieto, S. A. Hassan, S. A. R. Zaidi, and N. Iqbal, "Precision agriculture techniques and practices: From considerations to applications," *Sensors,* vol. 19, p. 3796, 2019.
2. S. Y. Nof, "Automation: What it means to us around the world," *Springer handbook of automation,* pp. 13-52, 2009.
3. S. Fountas, N. Mylonas, I. Malounas, E. Rodias, C. Hellmann Santos, and E. Pekkeriet, "Agricultural robotics for field operations," *Sensors,* vol. 20, p. 2672, 2020.
4. Q. Yang, X. Du, Z. Wang, Z. Meng, Z. Ma, and Q. Zhang, "A review of core agricultural robot technologies for crop productions," *Computers and Electronics in Agriculture,* vol. 206, p. 107701, 2023.
5. J. Canning, D. Edwards, and M. Anderson, "Development of a fuzzy logic controller for autonomous forest path navigation," *Transactions of the ASAE,* vol. 47, pp. 301-310, 2004.
6. A. Rejeb, A. Abdollahi, K. Rejeb, and H. Treiblmaier, "Drones in agriculture: A review and bibliometric analysis," *Computers and electronics in agriculture,* vol. 198, p. 107017, 2022.
7. H. Yaguchi, K. Nagahama, T. Hasegawa, and M. Inaba, "Development of an autonomous tomato harvesting robot with rotational plucking gripper," in *2016 IEEE/RSJ international conference on intelligent robots and systems (IROS)*, 2016, pp. 652-657.
8. W. McAllister, D. Osipychev, A. Davis, and G. Chowdhary, "Agbots: Weeding a field with a team of autonomous robots," *Computers and Electronics in Agriculture,* vol. 163, p. 104827, 2019.
9. F. J. Pierce and P. Nowak, "Aspects of precision agriculture," *Advances in agronomy,* vol. 67, pp. 1-85, 1999.
10. A. Botta, P. Cavallone, L. Baglieri, G. Colucci, L. Tagliavini, and G. Quaglia, "A review of robots, perception, and tasks in precision agriculture," *applied mechanics,* vol. 3, pp. 830-854, 2022.
11. B. Brisco, R. Brown, T. Hirose, H. McNairn, and K. Staenz, "Precision agriculture and the role of remote sensing: a review," *Canadian Journal of Remote Sensing,* vol. 24, pp. 315-327, 1998.
12. M. S. A. Mahmud, M. S. Z. Abidin, A. A. Emmanuel, and H. S. Hasan, "Robotics and automation in agriculture: present and future applications," *Applications of Modelling and Simulation,* vol. 4, pp. 130-140, 2020.
13. N. Zhang, M. Wang, and N. Wang, "Precision agriculture—a worldwide overview," *Computers and electronics in agriculture,* vol. 36, pp. 113-132, 2002.
14. S. Konam, "Agricultural aid for mango cutting (AAM)," in *2014 International Conference on Advances in Computing, Communications and Informatics (ICACCI)*, 2014, pp. 1520-1524.
15. Z. Rasin, H. Hamzah, and M. S. M. Aras, "Application and evaluation of high power zigbee based wireless sensor network in water irrigation control monitoring system," in *2009 IEEE Symposium on Industrial Electronics & Applications*, 2009, pp. 548-551.
16. D. Moundekar, P. Nakhate, S. Ghosh, and A. R. Kasetwar, "Agricultural Robot (Agribot): A Future of Agriculture," *Agriculture International,* vol. 6, pp. 06-10, 2020.
17. M. O'Connor, T. Bell, G. Elkaim, and B. Parkinson, "Automatic steering of farm vehicles using GPS," in *Proceedings of the Third International Conference on Precision Agriculture*, 1996, pp. 767-777.
18. N. C. Pradhan, M. A. Naik, M. Chowdhury, A. Kushwah, K. Asha, T. Dhar*, et al.*, "Robotic Seeding or Sowing System in Smart Agriculture," in *Artificial Intelligence and Smart Agriculture: Technology and Applications*, ed: Springer, 2024, pp. 495-520.
19. M. J. Roman, "Design and analysis of a four wheeled planetary rover," 2005.
20. P. N. Umakant and D. S. Tiwari, "Effective design of an agribot for smart farming," *International journal of computing and business research,* vol. 7, 2017.
21. T. Bak and H. Jakobsen, "Agricultural robotic platform with four wheel steering for weed detection," *Biosystems Engineering,* vol. 87, pp. 125-136, 2004.
22. C. Cariou, R. Lenain, B. Thuilot, and M. Berducat, "Automatic guidance of a four-wheel-steering mobile robot for accurate field operations," presented at the Journal of Field Robotics, 2009.
23. M. S. A. Khan, D. Hussain, K. Naveed, U. S. Khan, I. Q. Mundial, and A. B. Aqeel, "Investigation of widely used SLAM sensors using analytical hierarchy process," *Journal of sensors,* vol. 2022, p. 5428097, 2022.
24. M. S. A. Khan, D. Hussian, S. Khan, F. U. Rehman, A. B. Aqeel, and U. S. Khan, "Implementation of SLAM by using a Mobile Agribot in a Simulated Indoor Environment in Gazebo," in *2021 International Conference on Robotics and Automation in Industry (ICRAI)*, 2021, pp. 1-4.



NUST Journal of Engineering Sciences (NJES) is licensed under a Creative Commons Attribution 4.0 International License.